LEADVISION
INTERNATIONAL

OWNER'S MANUAL

GARAGE DOOR
WITH TORSION SPRING

DIMENSIONS
5' WIDTH X 6' HEIGHT (1.5m x 1.83m)

IMPORTANT SAFETY INSTRUCTIONS

WARNING: Read all instructions and warnings before use. Failure to follow all instructions may result in serious personal injury or product damage.

SAVE THESE INSTRUCTIONS FOR FUTURE USE.

TABLE OF CONTENTS

P3 THINGS TO KNOW BEFORE YOU BEGIN
P4 SAFETY INFORMATIONS

1
P5 ROOM NEEDED AND PREPARING THE OPENING

2
P6 ASSEMBLING THE VERTICAL TRACKS
P7 ASSEMBLING THE TRACK (2.1)

3
P8 HORIZONTAL TRACK BRACKET ASSEMBLY
CURVED TRACK JOINT ASSEMBLY (3.1)

4
P9 PREPARING THE DOOR SECTIONS
P10 PREPARATION AND INSTALLATION OF THE BOTTOM PANEL (4.1)
P11 PREPARATION AND INSTALLATION OF THE 2nd DOOR PANEL (4.2)
P12 PREPARATION AND INSTALLATION OF THE 3rd DOOR PANEL (4.3)
P13 PREPARATION AND INSTALLATION OF THE 4th DOOR PANEL (4.4)

5
P14 INSTALLATION OF THE TRACK OPPOSITE TO THE WALL

6
P15 HORIZONTAL TRACKS INSTALLATION

7
P16 TORSION SPRING SYSTEM INSTALLATION (7.1)
P17 INSTALLING BEARING BRACKETS TO THE WALL (7.2)
P18 CABLE AND SPRING WINDING (7.3)

8
P19 INSTALLATION OF THE OUTDOOR WEATHER STRIPS (8.1)
INSTALLATION OF THE HANDLE AND THE BOLT LOCK (8.2)

9
P20 ASSEMBLED DOOR

GARAGE DOOR WITH TORSION SPRING

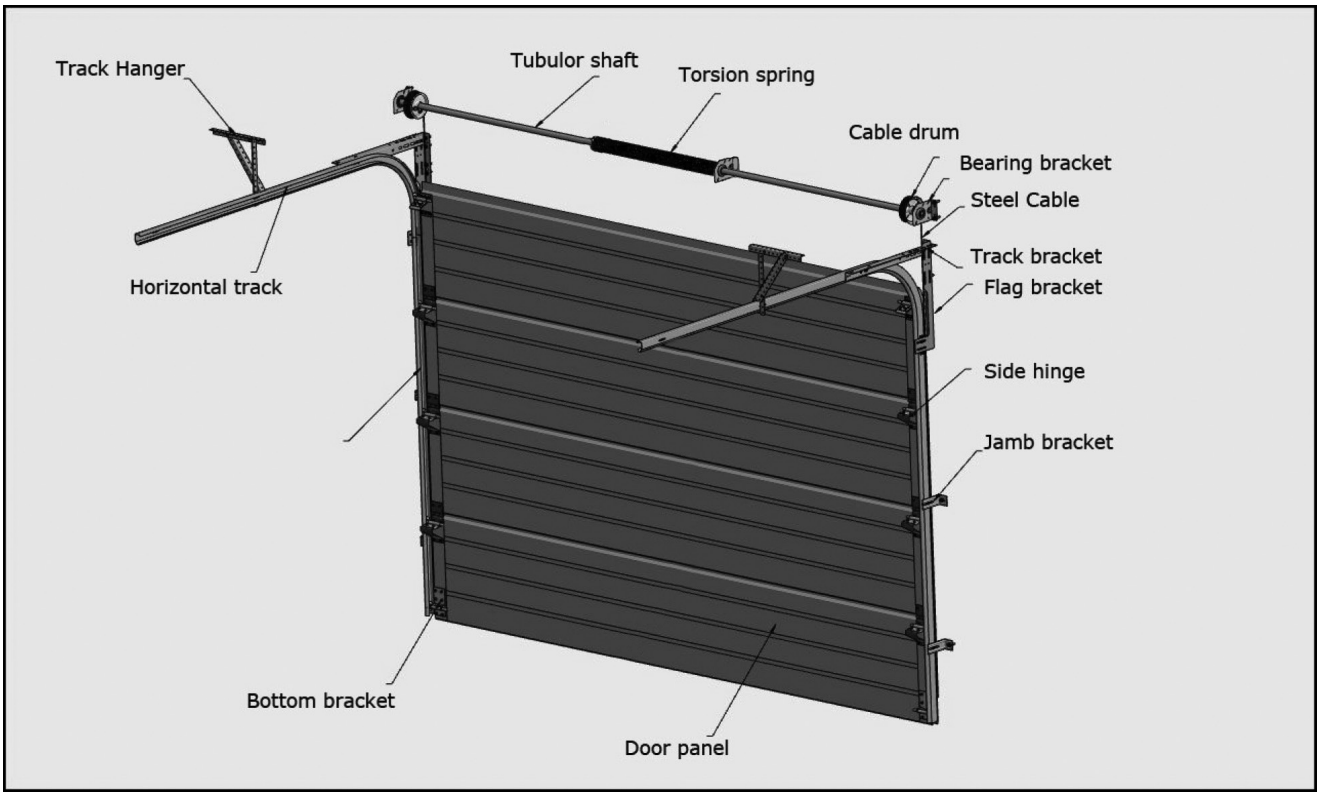

THINGS TO KNOW BEFORE YOU BEGIN

* Keep in mind, when planning the installation, that the garage will be opened and unsecured when assembling the new door.

* If the garage door is the only opening in the structure, make sure everything you need is inside. You will have no way of leaving the garage until the track is assembled and installed. This should take 5 hours.

* You may need an assistant to lift the door: without the springs, it can weigh between 30 and 100 kg.

* You have the necessary tools and good mechanical skills or a reasonable experience.

* Tools needed

Locking pliers, Hammer, Screwdriver, Tape measure, Level, Socket wrench kit, Drill, Step ladder,Hacksaw, T-square, 2 sawhorses.

* Additional material required (if necessary)

Light house hold oil, stop molding, wood block, rope.

READ THIS SAFETY INFORMATION

*Only the track specified and supplied with the door should be used.

*Garage doors use springs to balance them. There are two types of springs installed – extension or torsion. The following instruction is for TORSION spring door.

*The brackets at the bottom corners of your garage door are under great tension.

*Do not allow children to play beneath or with any garage door or electric operating controls.

*Keep hands and fingers clear of section joints, track, and other door parts when the door is opening and closing to avoid injury. The lift handle is provided for the safe operation as well as easy use.

*Track installations must use sway braces on the rear track hangers to prevent sideways movement. If the tracks are not firmly stabilized they might spread, allowing the door to fall and cause severe injury and damage.

*If the garage door and/or any of the supporting tracks are damaged, operating the door could be hazardous. Call an authorized representative of the manufacturer or professional door repair service promptly.

*Once you have completed the installation of your new garage door, please be sure that your garage complies with all applicable ventilation requirements before you enclose any vehicles in the garage. Good ventilation avoids fire and fumes accumulating within a wellsealed garage as they cause health hazards.

*Doors equipped with automatic door operators can cause serious injury or death if not properly adjusted and operated. To ensure safety of these doors:

a. Test the sensitivity of the operator's safety reverse mechanism monthly.
b. If your door has a pull down rope, you must remove the pull down rope.
c. Make sure the door remains unlocked.
d. Do not allow children to play with the controls.

1 STEP
HEADROOM / BACKROOM / SIDE ROOM NEEDED AND PREPARING THE OPENING

CHECK HEADROOM / BACKROOM / SIDE ROOM NEEDED

Headroom is the space needed above the top of the door for the door, the overhead tracks, and the springs. Measure to check that there are no obstructions in your garage within that space. The normal headroom space requirement as shown is 350 mm (13.8 in). The backroom distance is measured from the back of the door into the garage, and should be at least 450 mm (17.7 in) more than the height of the garage door. A minimum side room of 80 mm (3.1 in) should be available on each side of the door on the interior wall surface to allow for attachment of the vertical track assembly. The rough opening should be the same size as the door.

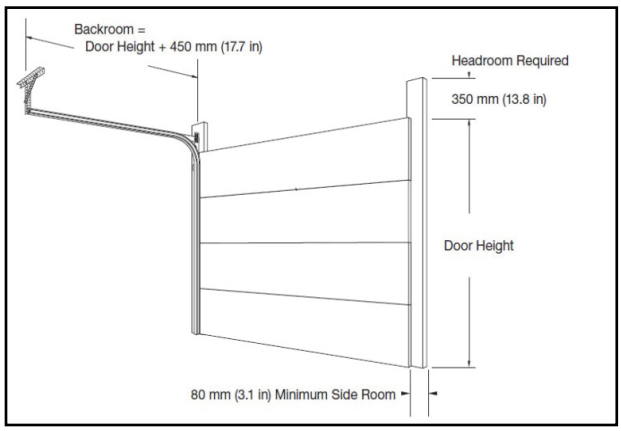

FIGURE 1.1

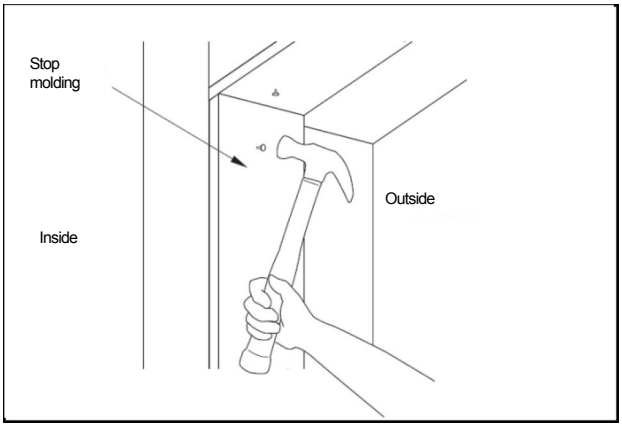

FIGURE 1.2

PREPARING THE OPENING

Doorstop molding should be temporarily nailed to the edges of the jambs flush with the inside. Stop molding featuring a built-in weather seal is offered.
Rough opening (without stop molding) = Door width

Necessary dimensions: it is recommended to keep 25.4 mm (1 inch) inside, so the opening should have a width of 1498.6 mm (59 in) and a height of 1803.4 mm (71 in).

2 STEP
ASSEMBLING THE VERTICAL TRACKS

You will need a level to fasten the track to the wall.

PARTS REQUIRED FOR THIS STEP :

A - JAMB BRACKET

B - BOLT

C - NUT

D - WOOD SCREW

E - FLAG BRACKET

F - CURVED TRACK (0.3 m)

G - RIGHT VERTICAL TRACK (1.915 m)

H - JUNCTION CURVED RAIL

FINAL FIGURE 2.1
OF STEP 2

Do not tighten the screws completely, loosen up a bit to adjust at each step.

2 2.1 ASSEMBLING THE TRACK (LEFT)

2.1.A Assemble the jamb brackets (A) to the right vertical track (G). Repeat 2 times (see Figure 2.1).

2.1.B Level and fasten the jamb brackets (A) to the wall using wood screws (D), while supporting the rail on the floor.

FIGURE 2.1.A

2.1.C Assemble the flag bracket (F) to the right vertical track (G).

2.1.D Level and then fasten the flag bracket to the wall using wood screws.

2.1.E When the previous steps are completed, tighten the screws firmly on track to solidify it all together, and make sure of the soundness of the installation to the wall.

FIGURE 2.1.C

2.1.F Assemble the curved track (F) to the flag bracket (E).

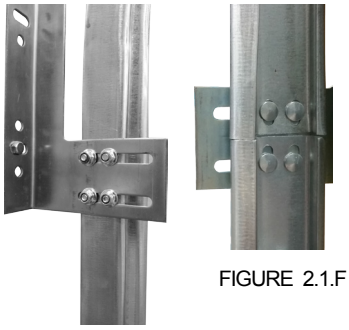

FIGURE 2.1.F

2.1.G Assemble the junction curved rail (H) to the curved track (F).

FIGURE 2.1.G

IMPORTANT
Wait for step 5 before assembling and installing the opposite side (right).

3 STEP
HORIZONTAL TRACK BRACKET ASSEMBLY

You will need a level for this step.

PARTS REQUIRED FOR THIS STEP :

I - HORIZONTAL CURVED TRACK (1.1 m)

B - BOLT

C - NUT

K - HORIZONTAL TRACK BRACKET

J - ASSEMBLED TRACK (STEP 2)

Do not tighten the screws completely, loosen up a bit to adjust at each step.
Tighten all screws firmly at the end of this step.

3.1 CURVED TRACK JOINT ASSEMBLY

3.1.A Assemble the horizontal curved track (I) to the assembled track (J) with the bolts (B) and nuts (C).

3.1.B Attach the horizontal track bracket (K) to the horizontal curved track (I) with bolt (B) and nut (C).

3.1.C Attach the horizontal track bracket (K) to the flag bracket (E) with bolt (B) and nut (C).

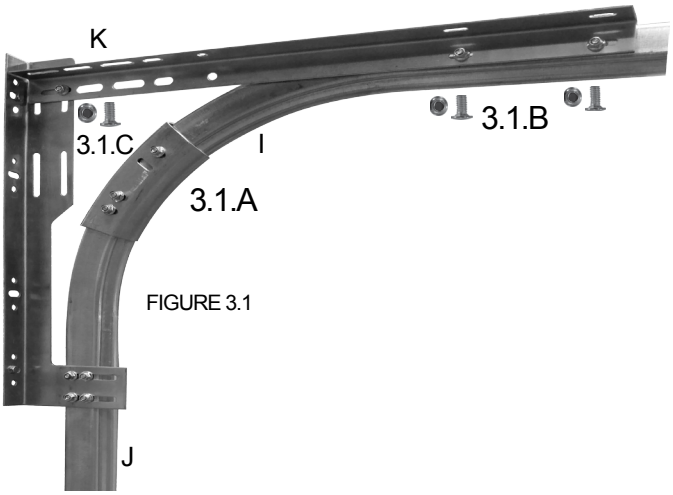

FIGURE 3.1

IMPORTANT
Level the horizontal track bracket (K).

4 STEP
PREPARING THE DOOR SECTIONS

PARTS REQUIRED FOR THIS STEP :

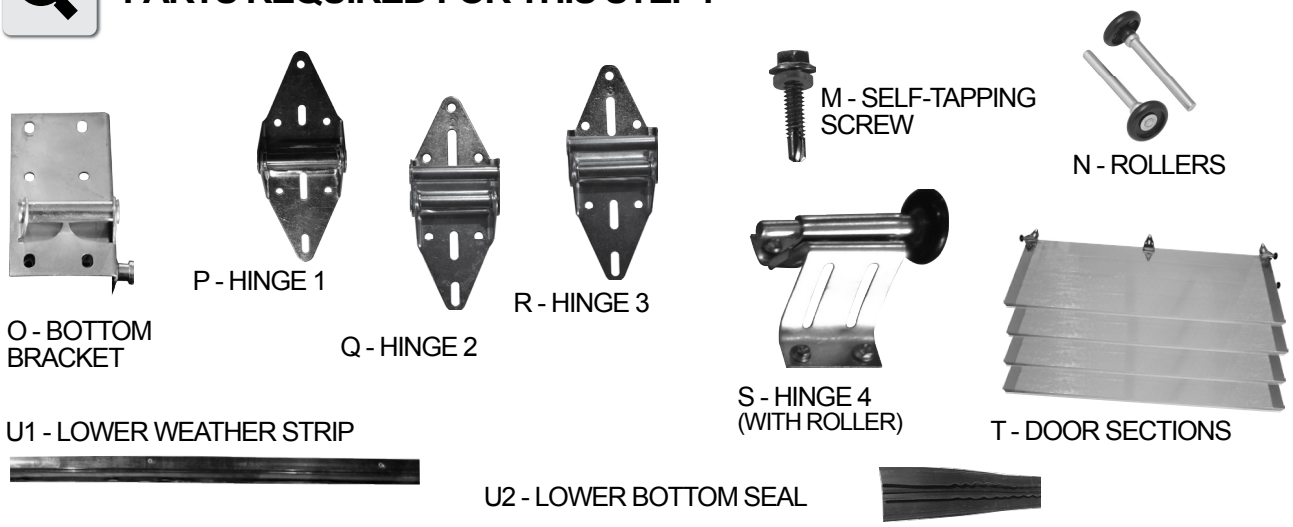

4.1 PREPARING AND INSTALLING THE BOTTOM DOOR SECTION

4.1.A Spread the hardware on the garage floor in groups so that you can easily find the parts.

4.1.B Find the bottom section with the weather strip retainer fastened to one edge. The weather-strip is on the bottom edge of the bottom section. Place the bottom section on sawhorses facing down. Be sure to cover sawhorses with carpet or cloth so as not to scratch the bottom section. Install lower weather strips (U) using self-tapping screws (Figure 4.1.B).

FIGURE 4.1.B

4 STEP
PREPARATION OF THE DOOR PANELS

4.1 PREPARATION AND INSTALLATION OF THE BOTTOM PANEL

FIGURE 4.1

Some models of hinges do not have number 1. Be careful to position the hinge in the openings.

4.1.C Install the bottom brackets (O) and then the hinges #1 (P). The #1 hinge should be installed so that the number is upside down when you're facing the panel (Figure 4.1). The part with the number should be screwed on the bottom panel. The top part of the hinge will be screwed on the next panel at the end of step 4.

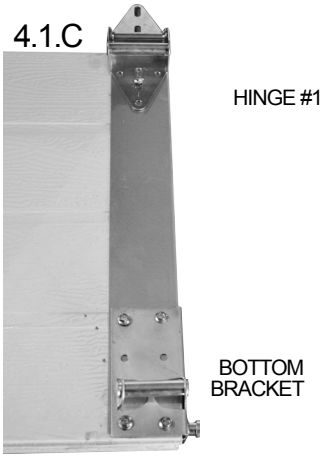

4.1.D Place the rollers in the side hinges.


FIGURE 4.2

4.1.E Slide the assembled lower panel with the rollers in the track (left) attached to the wall. Let the panel stand on the ground (Figure 4.4).

FINAL FIGURE 4.3 and 4.4 OF STEP 4.1

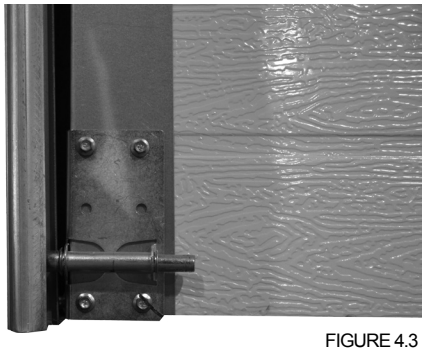
FIGURE 4.3


FIGURE 4.4

4 STEP
PREPARATION OF THE DOOR PANELS

4.2 PREPARATION AND INSTALLATION OF THE 2nd DOOR PANEL

Caution : Make sure the tenon (male) fits in the cavity (mortise or female) along the edge of the door.


MORTISE OR FEMALE EDGE

4.2.A Place the 2nd section on sawhorses facing down. Be sure to cover sawhorses with carpet or cloth so as not to scratch the bottom section.

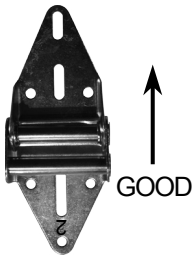

FIGURE 4.1

4.2.B Install the three hinges #2 (Q). The #2 hinges should be installed so that the number is upside down when you're facing the panel (Figure 4.1).
The part with the number should be screwed on the 2nd panel. The top part of the hinge will be screwed on the next panel at the end of step 4.

4.2.C Place the rollers in the side hinges.


FIGURE 4.2

4.2.D Slide the assembled 2nd panel with the rollers in the track (left). Stack the panel on top of the previous one (Figure 4.3).

IMPORTANT
Do not screw the top part at this step.

FINAL FIGURE 4.3
OF STEP 4.2

4 STEP
PREPARATION OF THE DOOR PANELS

4.3 PREPARATION AND INSTALLATION OF THE 3rd DOOR PANEL

Caution : Make sure the tenon (male) fits in the cavity (mortise or female) along the edge of the door.


MORTISE OR FEMALE EDGE

4.3.A Place the 3rd section on sawhorses facing down. Be sure to cover sawhorses with carpet or cloth so as not to scratch the bottom section.

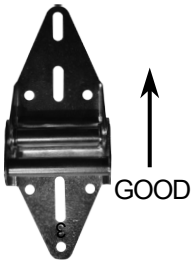

FIGURE 4.1

4.3.B Install the three hinges #3 (R). The #3 hinges should be installed so that the number is upside down when you're facing the panel (Figure 4.1).
The part with the number should be screwed on the 3rd panel. The top part of the hinge will be screwed on the next panel at the end of step 4.

4.3.C Place the rollers in the side hinges.


FIGURE 4.2

4.3.D Slide the assembled 3rd panel with the rollers in the track (left). Stack the panel on top of the previous one (Figure 4.3).

IMPORTANT
Do not screw the top part at this step.

FINAL FIGURE 4.3
OF STEP 4.3

4 STEP
PREPARATION OF THE DOOR PANELS

4.4 PREPARATION AND INSTALLATION OF THE 4th DOOR PANEL

Caution : Make sure the tenon (male) fits in the cavity (mortise or female) along the edge of the door.


MORTISE OR FEMALE EDGE

4.4.A Place the 4th section on sawhorses facing down. Be sure to cover sawhorses with carpet or cloth so as not to scratch the bottom section.


FIGURE 4.1

4.4.B Install the two hinges #4 (S) at the top edge of the panel (Figure 4.2).

4.4.C Place the rollers in the side hinges.


FIGURE 4.2


FIGURE 4.3

4.4.D Slide the assembled 4th panel with the rollers in the track (left). Stack the panel on top of the previous one (Figure 4.3).

4.4.E Adjust the panels. Make sure everything is well positioned. You can now tighten all hinges on the panels together.


FINAL FIGURE 4.4
OF STEP 4

5 STEP
INSTALLATION OF THE TRACK OPPOSITE TO THE WALL

Assemble the jambs of bracket on the opposite track (right) without attach to the wall. (For mounting and installation track, refer to step 2 and 3).

5.1 INSTALLATION ON THE WALL

5.1.A Start by placing the assembled track over the hinges rollers.

FIGURE 5.1

FIGURE 5.2

FIGURE 5.3

5.1.B Fasten the jamb bracket to the wall.

FIGURE 5.4

5.1.C Level and fasten the flag bracket to the wall. Then, refer to the step 2 and 3 to complete the assembly on the wall.

FIGURE 5.5

Make sure of the soundness of the installation to the wall before proceeding to the next step.

6 STEP
HORIZONTAL TRACK INSTALLATION

PARTS REQUIRED FOR THIS STEP :

V1 - HORIZONTAL TRACK (1.14 m)

V2 - TRACK JOINT

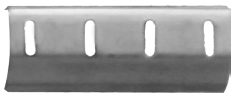

V3 - REAR TRACK HANGERS

Do not tighten the screws completely, loosen up a bit to adjust at each step. Tighten all screws firmly at the end of this step.

Use a rope or steel wire as temporary support of the back of the horizontal track, attaching it to a overhead structure.

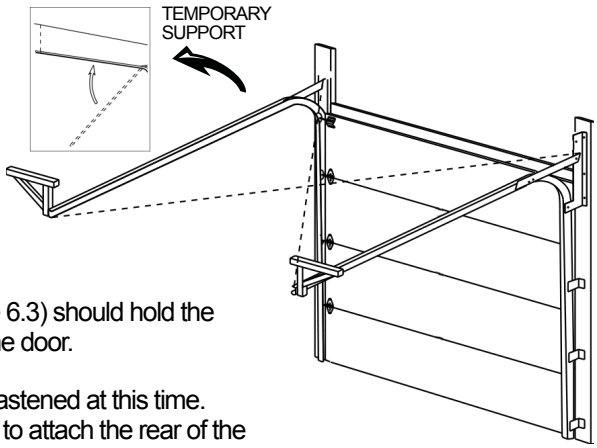

FIGURE 6.2

6.1 HORIZONTAL TRACKS INSTALLATION

6.1.A Assemble the rear end of the horizontal track (V1) to the horizontal curved track (I) with the track joint (V2) (Figure 6.1). Make sure to place the heads of the screws inside of the tracks. Attach the stopper to end of the rail (V1).

FIGURE 6.1

6.1.B The rear track hangers (Figure 6.3) should hold the horizontal track level and square to the door.

Rear track hangers need (V3) to be fastened at this time. Use perforated angle. They are used to attach the rear of the horizontal track to the ceiling joist.

Placement of rear track hangers (V3) is critical for the door to operate properly. The rear track hangers should hold the horizontal track level and square to the door.

Squareness should be measured by comparing two diagonal distances (Figure 6.2).

FIGURE 6.3

Rear track hangers should not be mounted any farther than 150 mm from the end of the horizontal track.

The tops of the vertical tracks must be level with each other. Check this by measuring from the top of the door sections to the top of the track on both sides. If they are not equal, cut some material off the bottom of one track to lower it or raise the other track. The horizontal and vertical track must join together to form a continuous channel for the rollers.

7 STEP
TORSION SPRING SYSTEM INSTALLATION

PARTS REQUIRED FOR THIS STEP :

W - SHAFT JOINT

AA - BEARING BRACKET

BB - CABLE DRUM

X - LONG SHAFT

Y - TORSION SPRING

Z - SHORT SHAFT

7.1 TORSION SPRING SYSTEM ASSEMBLY

7.1.A Assemble the shafts with the shaft joint. Align the shafts and tighten the join with an Allen key. Do not overtighten.

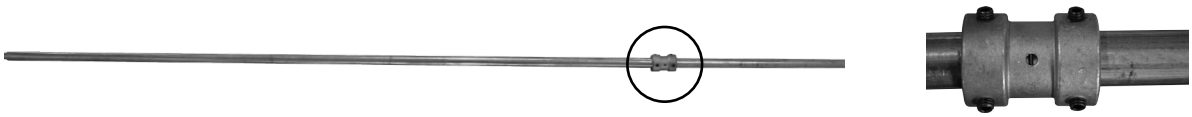

FIGURE 7.1

7.1.B Screw the torsion spring to the bearing bracket.

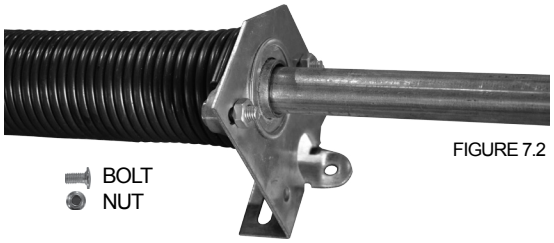

FIGURE 7.2

7.1.C Wear the spring, center bearing bracket, cable drums, and side bearing brackets on the shaft. See Figure 7.3.

FIGURE 7.3

7 STEP
TORSION SPRING SYSTEM INSTALLATION

7.2 INSTALLING BEARING BRACKETS TO THE WALL

7.2.A Fix the bearing brackets on the wall. The distance from end of the side bracket to the top door opening should be at least 350 mm. The side bracket is at the same height as the flag bracket and the vertical track.

7.2.B The center bearing bracket (AA) should be aligned at the right side of the torsion spring.

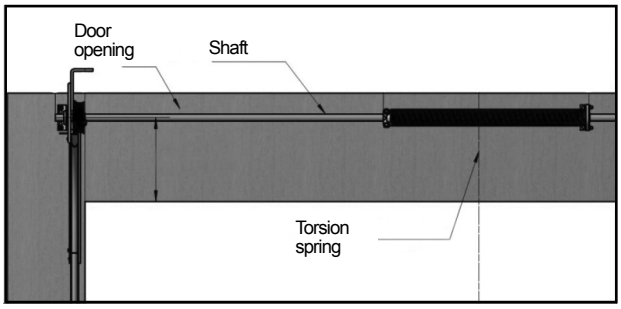

FIGURE 7.1

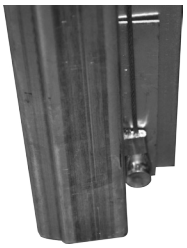

FIGURE 7.2

7.2.C Hang the cable on the bottom brackets first, then pull behind the side hinges up to the cable drum.

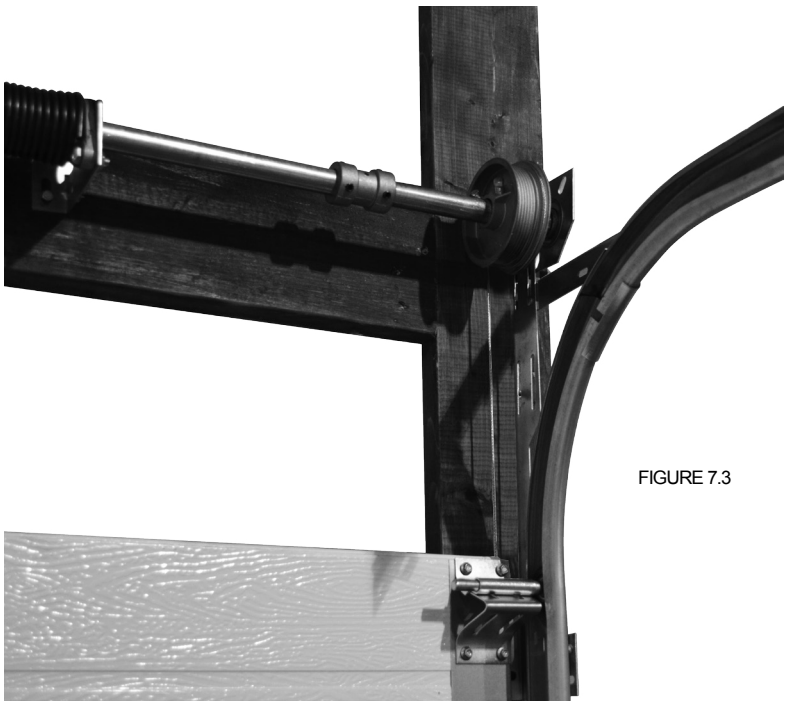

FIGURE 7.3

7.2.D Fix the cable on the cable drums, and keep the cables tight then fix the cable drum on the shaft with the two screws.

7 STEP
TORSION SPRING SYSTEM INSTALLATION

7.3 CABLE AND SPRING WINDING

Tighten locking pliers to the shaft and brace to the header (Figure 7.1).

Initial winding : 5 turns
Then adjust accordin g to the cables tension.
Each hole on the winding cone is one quarter of a turn.

7.3.A The torsion spring shoud be installed on the left side of the door. Winding the torsion spring is done by turning the winding cone toward the ceiling (Figure 7.2). Then tighten the screws on the shaft (Figure 7.3).

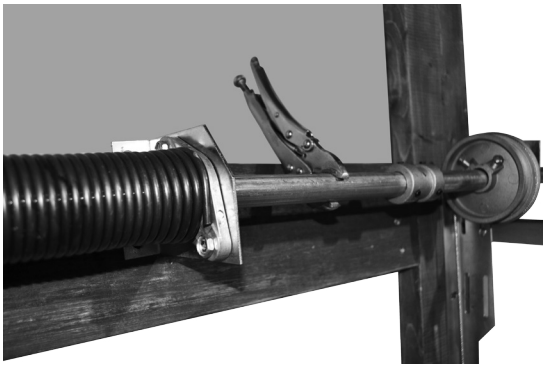
ILLUSTRATION 7.1

The two winding bars are not included.

Suggestion:
Initial winding of five turns. Remove the locking pliers and the winding bars. Then lift the door and check the cables tension. If the cables are not tight enough lifting the door, close the door and wind two more turns. Check again lifting the door.

If the cables are not tight enough lifting the door, repeat these steps until the cables remain tight when door is lifted.

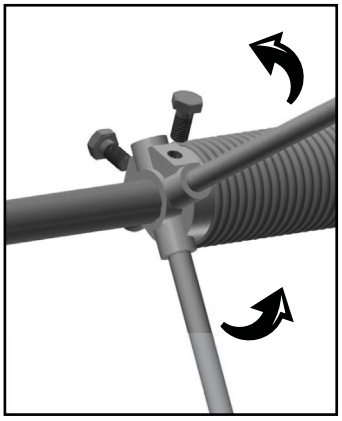
FIGURE 7.2

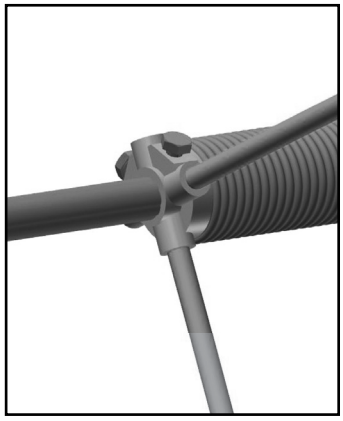
FIGURE 7.3

Mark a line to count the number of turns while winding springs.

Warning. Be very cautious from this step onward, the torsion spring being under tension and very dangerous.

8 STEP
INSTALLATION OF THE OUTDOOR WEATHER STRIPS, THE HANDLE AND THE BOLT LOCK

PARTS REQUIRED FOR THIS STEP :

CC - OUTDOOR WEATHER STRIP

EE - BOLT LOCK

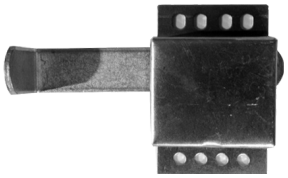

DD - HANDLE

8.1 OUTDOOR WEATHER STRIPS INSTALLATION

8.1.A Install the outdoor weather strips without disturbing the normal operation of the garage door.

8.2 HANDLE AND BOLT LOCK INSTALLATION

8.2.A Install the door handle (DD), centering it at the bottom section of the interior side of the door.

8.2.B The inside slide bolt lock (EE) is installed to the left or the right of the vertical track. Refer to figure 8.2.

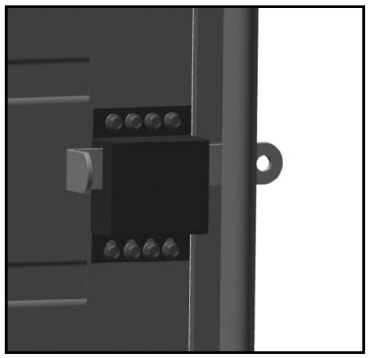

FIGURE 8.2

9 STEP
ASSEMBLED DOOR

9.1 CONGRATULATIONS !

9.1.A You've completed the door assembly.