ELEGANCE PREMIUM®

LEADVISION INTERNATIONAL

42” HYBRID COMPOSITE RAILING INSTALLATION GUIDE

V20171004

CONTENTS

Important notes	1-3
Straight Railing and Post Parts	4
Straight Railing Installation	5-9
Stair Railing and Post Parts	10
Stair Railing Installation	11 - 16

For the most up to date information please visit our website: www.leadvisioninternational.com

Please consult local zoning laws in regards to the load requirements and bottom space requirements for rails. All supporting structures must be in accordance with applicable building codes. Neighborhood associations and/or historic districts may regular size, type, placement and ability of railing. Apply for permits if required by local authorities and codes. Ensure compliance prior to installation. Local building code requirements will always supersede any and all suggested procedures and measurements in the following installation. The following installation instructions are intended as a general guideline based on common building practices used in railing installations.

IMPORTANT:

Read All Sections Before You Start.

For the most up to date information please visit our website www.leadvisioninternational.com

Prior to installing any composite fence it is recommended that you check with local building codes for any special requirements or restrictions. The diagrams and instructions outlined in this guide are for illustration purposes only and are not meant or implied to replace a licensed professional. Any construction or use of Elegance Premium must be in accordance with all local zoning and/or building codes.
The consumer assumes all risks and liability associated with the construction and use of this product.

Saftey

When dealing with any type of construction project it is necessary to wear appropriate safety equipment to avoid any injuries. Elegance Premium recommends but is not limited to the following safety equipment when handling, cutting, and installing Elegance Premium: gloves, a respiratory protection, long sleeves, pants, and safety glasses.

Tools

Standard woodworking tools may be used. It is recommended that all blades have a carbide tip. Standard stainless steel or acceptable coated deck screws and nails are recommended.

Environment

A clean, smooth flat, and strong surface is needed to install Elegance Premium products correctly. Please always check with local building codes before installing any type of railing. If installation does not occur immediately Elegance Premium products need to be put on a flat surface at all times. It should never be put on an uneven surface.

Planning

Plan a layout for your railing before starting it to ensure the best possible looking railing for your project. Building codes and zoning ordinances generally apply to permanent structures, meaning anything that is anchored to the ground or attached to the house. So nearly every kind of railing requires permits and inspections from a local building department. We recommend drawing out a site plan of your proposed project that you intend to do to minimize errors and make your perfect railing.

Construction

Elegance Premium is NOT intended for use as columns, support posts, beams, joist stringers, or other primary load bearing members. Elegance Premium must be supported by a code-compliant substructure.

Static

Static build-up is a natural occurring phenomenon that can occur with many plastic products. Dry and windy environments may make this even more apparent, this all varies depending on the climate and age of the railing.

One way to decrease the number of static discharges is to apply Staticide (www.aclstaticide.com) on your deck or use anti-static mats before doorways. Elegance Premium products have been tested against EN 1815 - Assessment of Static Electrical Propensity and have received values under the maximum standard of 2kV.

Storage

Elegance Premium products always need to be stored on flat solid surfaces. Surfaces such as dirt and grass are not sufficient as they can move over time.

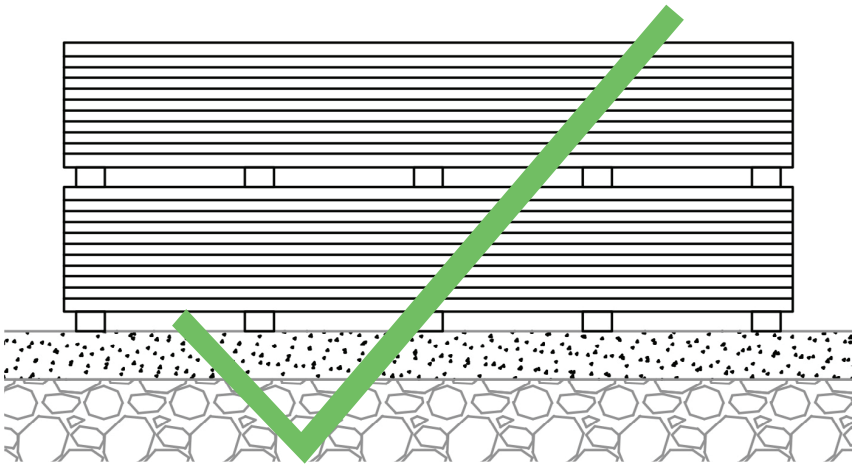

Elegance Premium products shown above put on a flat surface on joists, this is the correct way for storage.

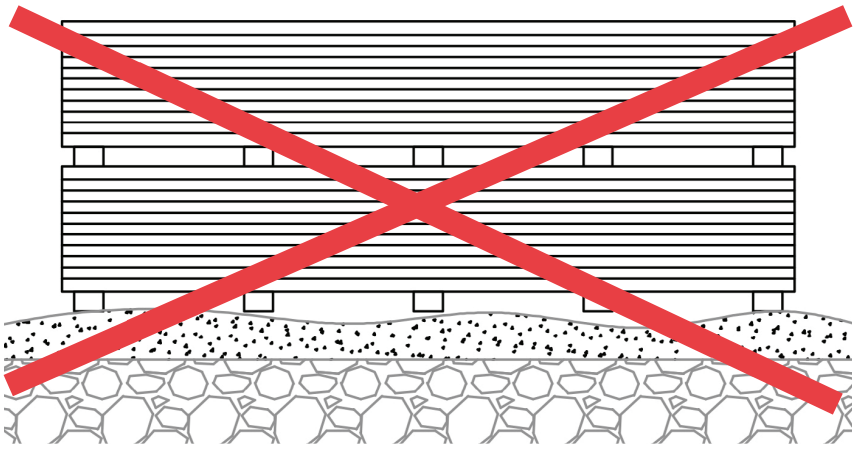

Elegance Premium products shown above on an uneven surface which will make the products prone to warping and distortion.

Straight Railing and Post Parts:

IMPORTANT POINTS:

- Parts D, E, and F will be different from those displayed in the stair railing and post parts.
- All other parts are the same for straight and stair railings and posts.

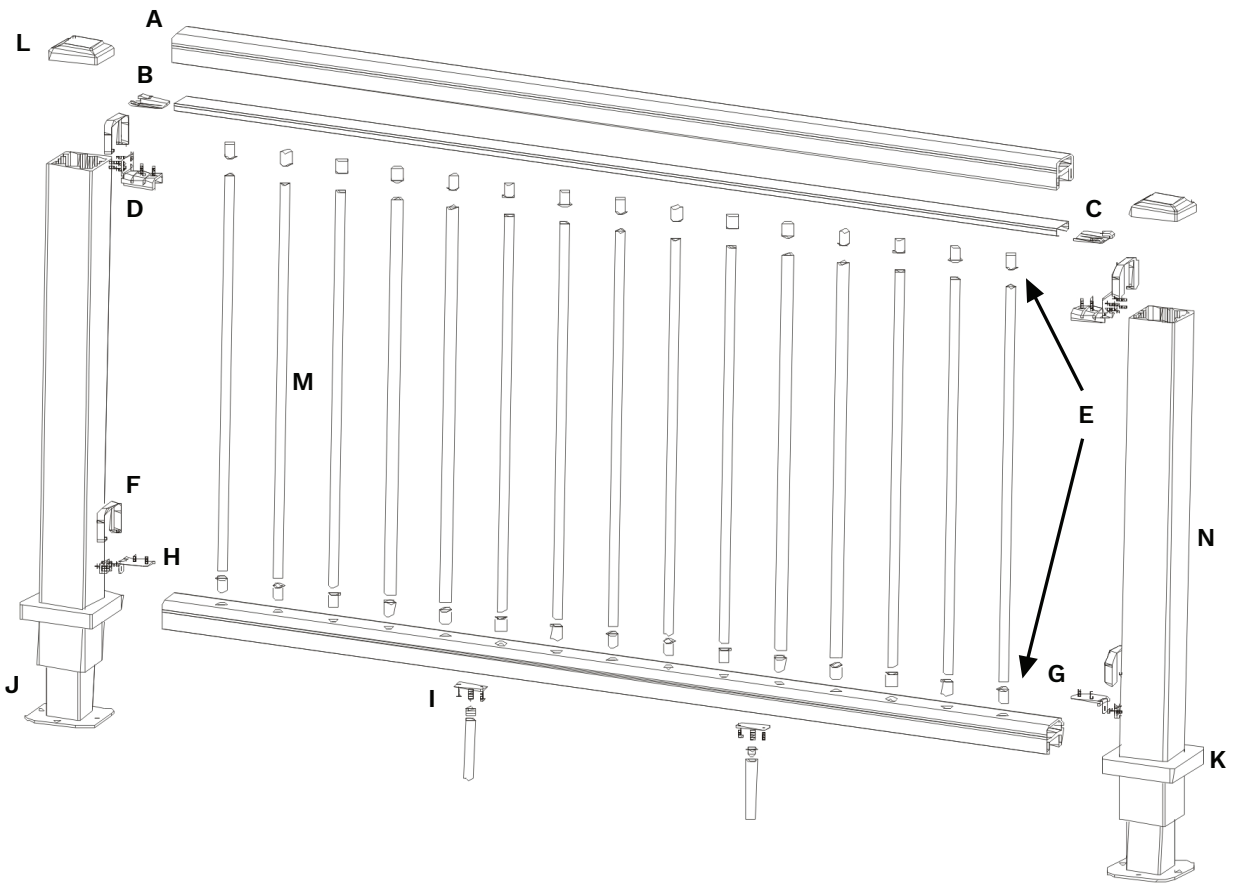

A - UR02 (X2)

B - LV-0209 (X1)

C - LV-0210 (X2)

D - R0211 (X2)

E - LV-0218-B (X30)

F - R0102 (X4)

G - R0205 (X2)

H - R0204 (X2)

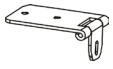

I - LV-0216 (X2)

J - LV-0215-42 (X2)

K - LV-0119 (X2)

L - LV-0120 (X2)

M - LV-0218-A-42 (X15)

N - UH35 (X2)

Straight Railing Installation:

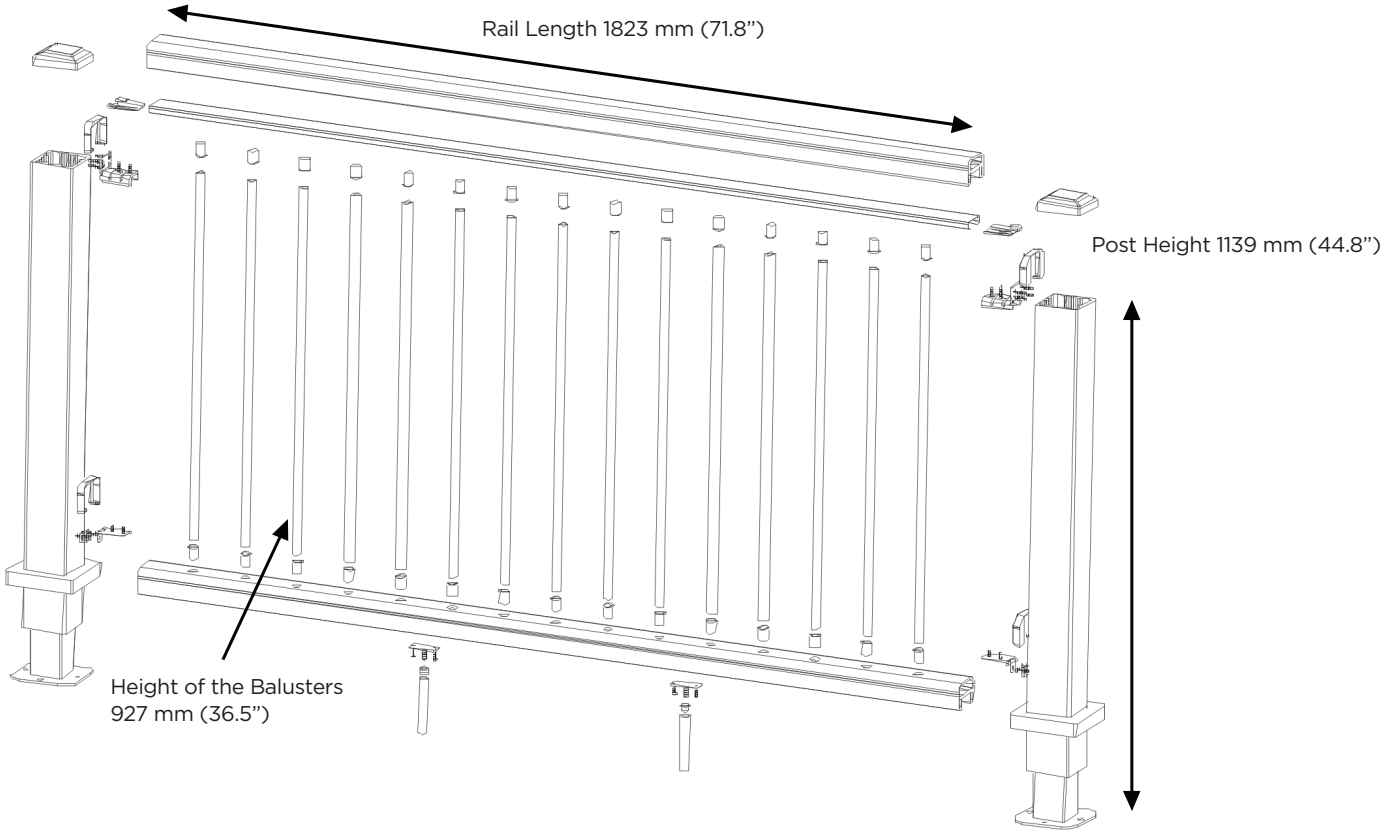

IMPORTANT POINTS:

- This railing is designed for a maximum of 1823 mm (71.8") internal rail length.
- Aluminum balusters (M-LV-0218-A-42) DO NOT need to be cut for the straight railing 927 mm (36.5").
- Cut the handrail, the bottom rail and the galvanized insert on each side to comply with the Canadian Building Code, which requires a maximum width of 102 mm (4") between the balusters.
- Posts need to be cut to the proper design height of 1139 mm (44.8") for the composite sleeve and 1090 mm (43 ") for the steel post.
- Foot blocks should be evenly spaced out depending on the length of the final rail.
- Foot blocks cannot be installed underneath a pre-drilled baluster hole.

1 Mark where the post mount (J-LV-0215-42) will be installed. The maximum distance of the post mount is 1923 mm (75.7") from center to center as shown in diagram 1.

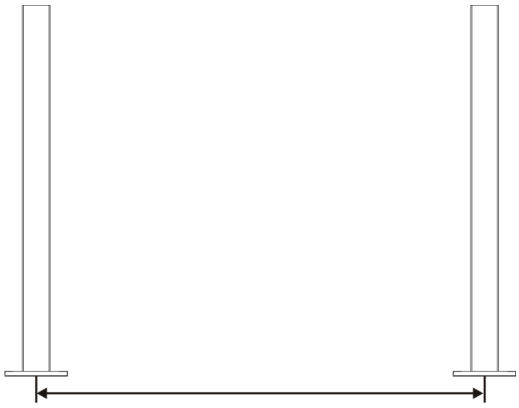

DIAGRAM 1

2 Cut post mount (J-LV-0215-42) to the length of 1090 mm (43 ") as shown in diagram 2.

Cut post sleeve (N-UH35) to the length of 1139 mm (44.8") as shown in diagram 3.

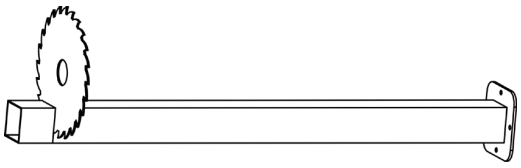

DIAGRAM 2

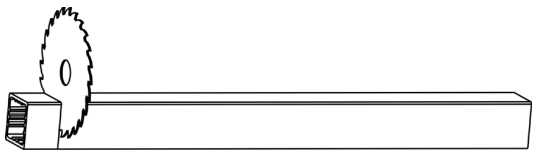

DIAGRAM 3

3 Install the post mount (J-LV-0215-42) as shown in diagram 4.

Install the post sleeve (N-UH35) with screw WJ0133 as shown in diagram 5.

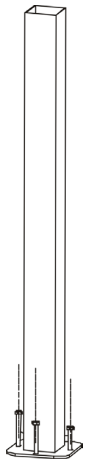

DIAGRAM 4

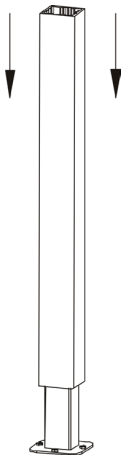

DIAGRAM 5

4 Mark where the post brackets will be installed with the "Straight Railling" cardboard template as shown in diagram 6. Use the top 4 holes for top post brackets and use bottom 2 holes for the bottom post brackets as shown in diagram 7.

Note: The cardboard template location should be measured from the bottom.

Pre-drill post bracket holes with a 3 mm (7/64 Inch) bit.

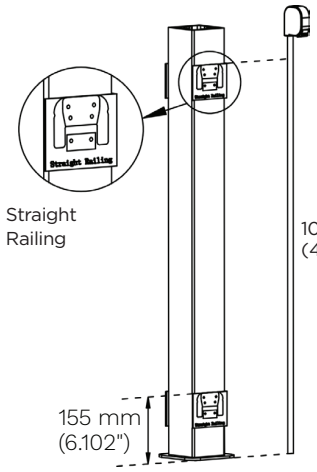

DIAGRAM 6

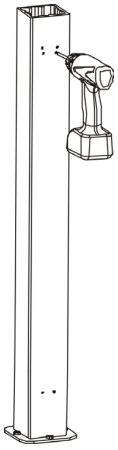

DIAGRAM 7

5 Lower the post skirt (K-LV-0119) over the post sleeve (N-UH35) as shown in diagram 8.

Drill in the top post brackets (D-R0211) with screw WJ0130 as shown in diagram 9.

Drill in the bottom post brackets (G-R0205) with screw WJ0131 as shown in diagram 10.

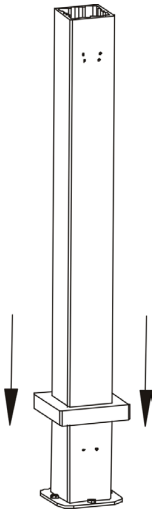

DIAGRAM 8

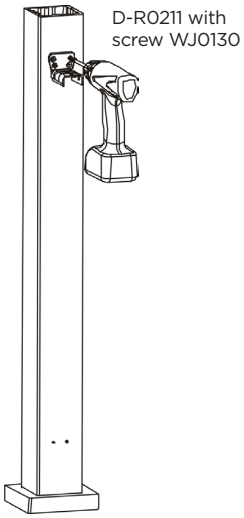

DIAGRAM 9

DIAGRAM 10

6 Cut rail (A-UR02) to the length between the post sleeve (N-UH35) minus 3 mm (0.118") on each side for inserting the gaskets (F-R0102) as shown in diagram 11.

Remember to take out galvanized insert (B- LV-0209) before cutting rail (A-UR02). The galvanized insert (B-LV-0209) should be cut 6mm shorter than the rail (A-UR02).

Note: Need to leave at least 75 mm (2.953") between the ends of the rail and the first hole of each end as shown in diagram 12.

DIAGRAM 11

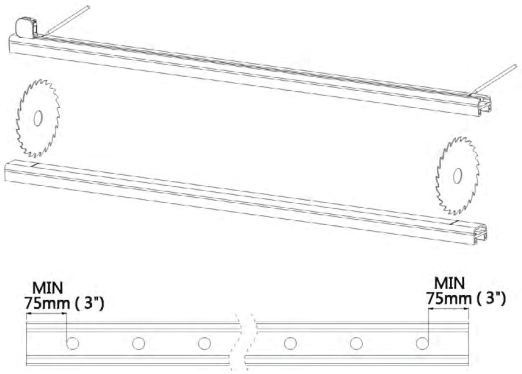

DIAGRAM 12

7 The bottom bracket (H-R0204) should be installed with screw WJ0020 at 29.5 mm (1.2") and 24 mm (1") from the ends of the rail as shown in diagram 13. Alternatively, a flat board can be used to press the bracket up against the end of rail to line up the correct distance.

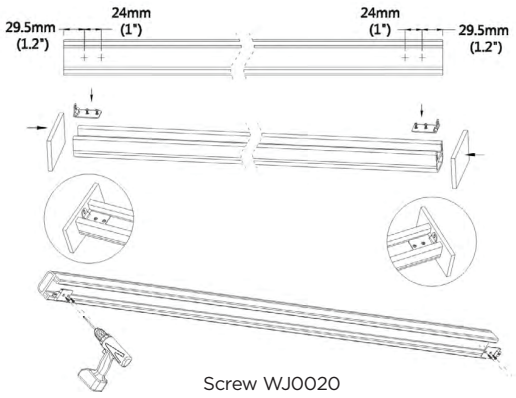

DIAGRAM 13

8 Pre-drill and install the foot blocks (I-LV-0216) with screw WJ0020 on the bottom rail as shown in diagram 14. Foot blocks should be evenly spaced out depending on the length of the final rail and cannot be installed underneath a pre-drilled baluster hole.

Note: Top rail is A in diagram 15. The holes should be facing downwards. Bottom rail is B in diagram 15. The holes should be facing upwards.

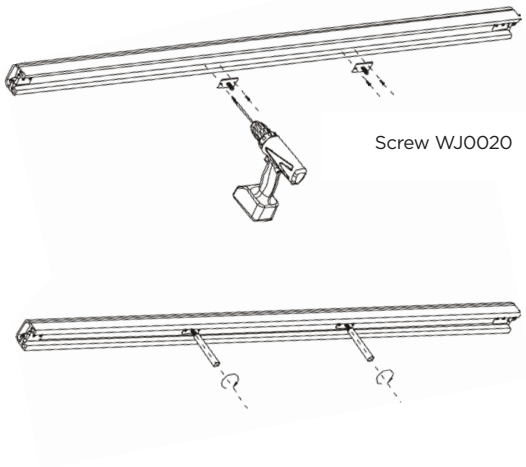

DIAGRAM 14

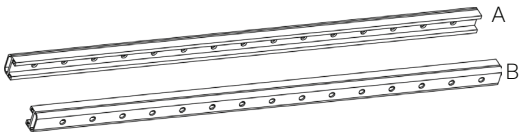

DIAGRAM 15

9 Attach the bottom rail (A-UR02) onto the bottom post brackets (G-R0205) as shown in diagram 16.

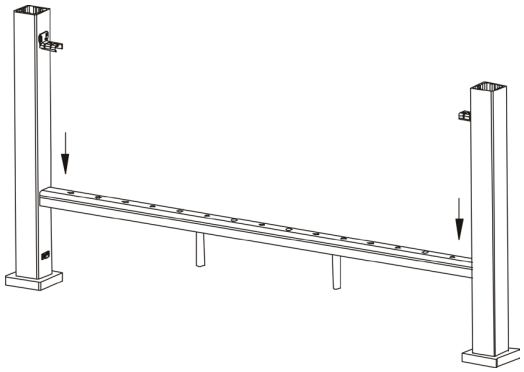

DIAGRAM 16

10 Install the baluster plugs (E-LV-0218-B) and aluminum balusters (M-LV-0218-A-42) as shown in diagram 17.

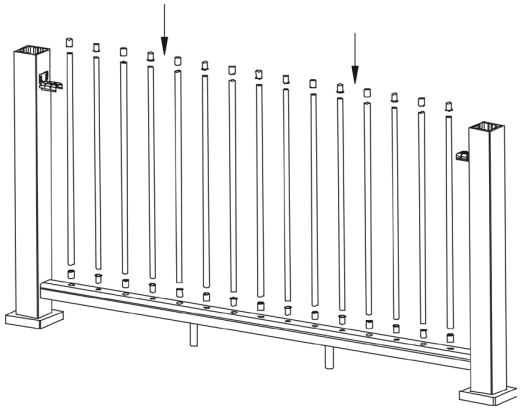

DIAGRAM 17

11 Attach the galvanized adaptors (C-LV-0210) on both ends of the galvanized insert (B-LV-0209) as shown in diagram 18.

DIAGRAM 18

12 Slide the galvanize insert (B-LV-0209) into the top rail (A-UR02) as shown in diagram 19.

DIAGRAM 19

13 Attach the top rail (A-UR02) onto the top of the post brackets (D-R0211) as shown in diagram 20.

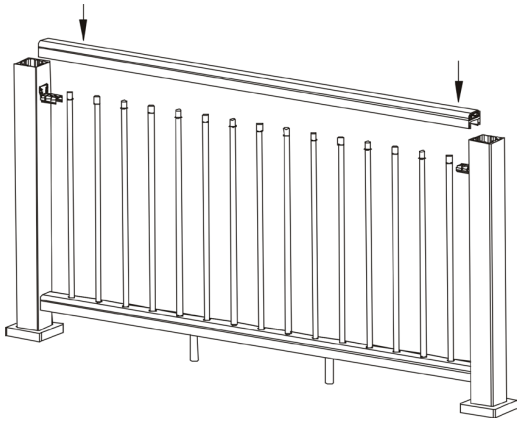

DIAGRAM 20

14 Pre-drill and install with screw WJ0142 as shown in diagram 21.

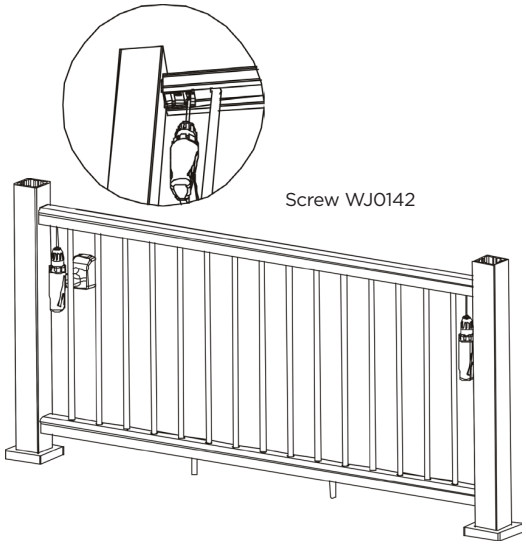

DIAGRAM 21

15 Attach post caps (L-LV-0120) and gaskets (F-R0102) as shown in diagram 22.

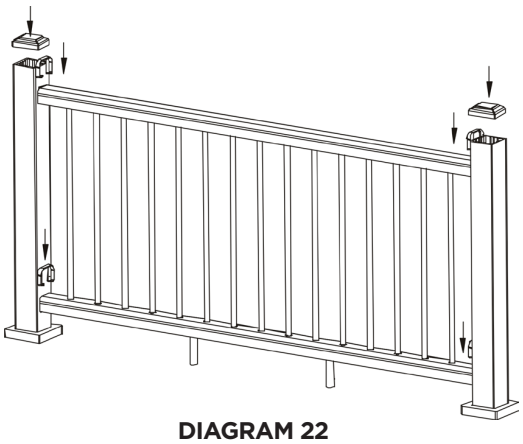

DIAGRAM 22

16 If needed adjust the foot blocks (I-LV-0216) to the correct height as shown in diagram 23.

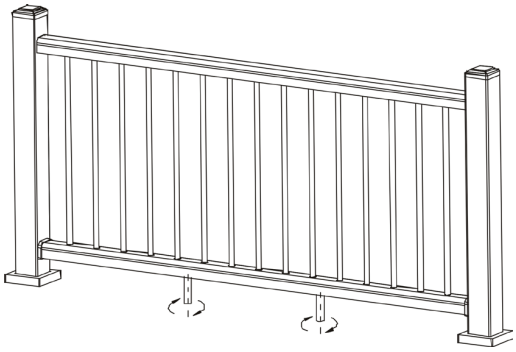

DIAGRAM 23

Stair Railing Installation:

- Parts D, E, F, and O will be different from those displayed in the stair railing and post parts.
- All other parts are the same for straight and stair railings and posts.

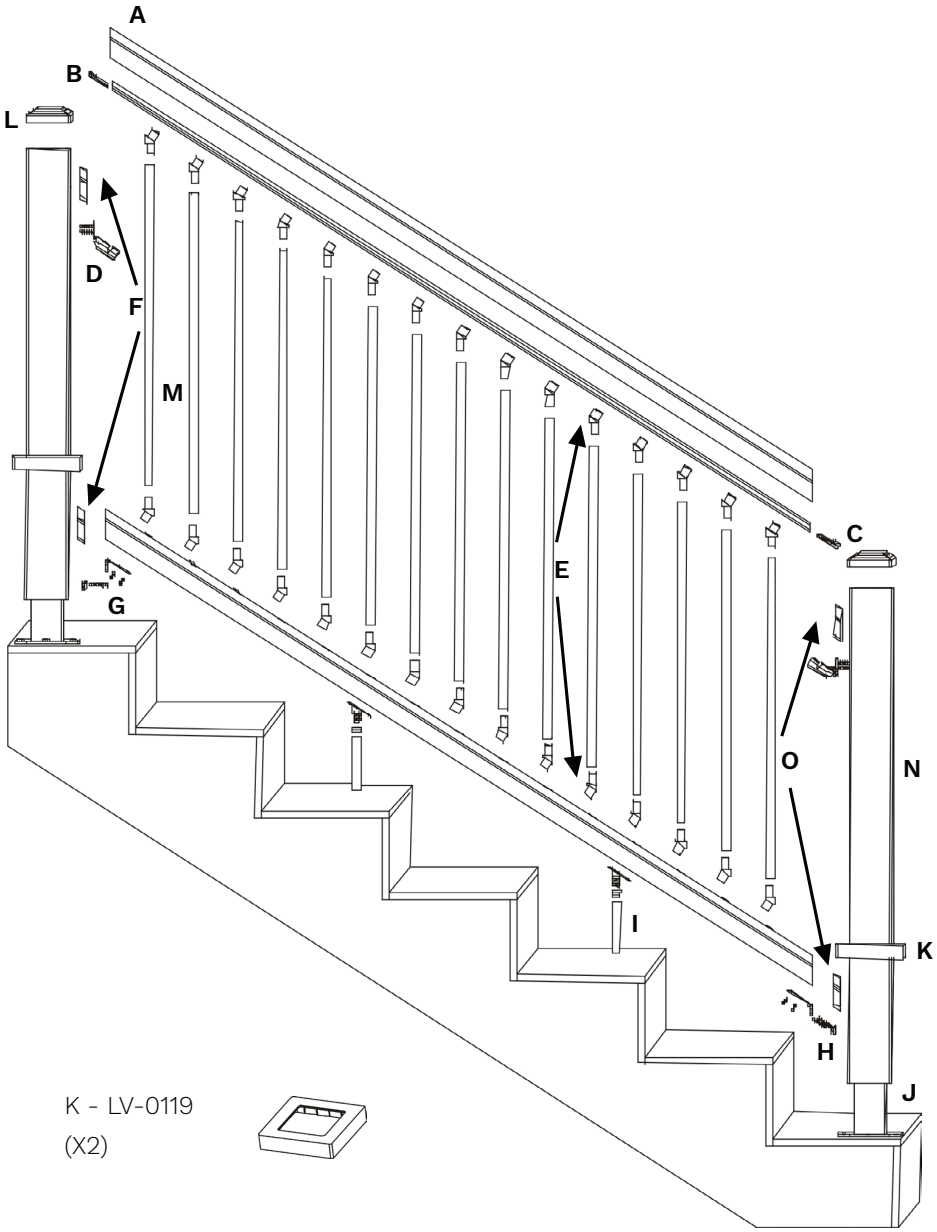

A - UR02
(X2)

B - LV-0209
(X1)

C - LV-0210
(X2)

D - R0203
(X2)

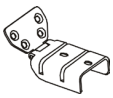

E - LV-0218-C
(X30)

F - R0113
(X2)

G - R0205
(X2)

H - R0204
(X2)

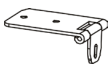

I - LV-0217
(X2)

J - LV-0215-42
(X2)

K - LV-0119
(X2)

L - LV-0120
(X2)

M - LV-0218-A-42
(X15)

N - UH35
(X2)

O - R0115
(X2)

Stair Railing Installation:

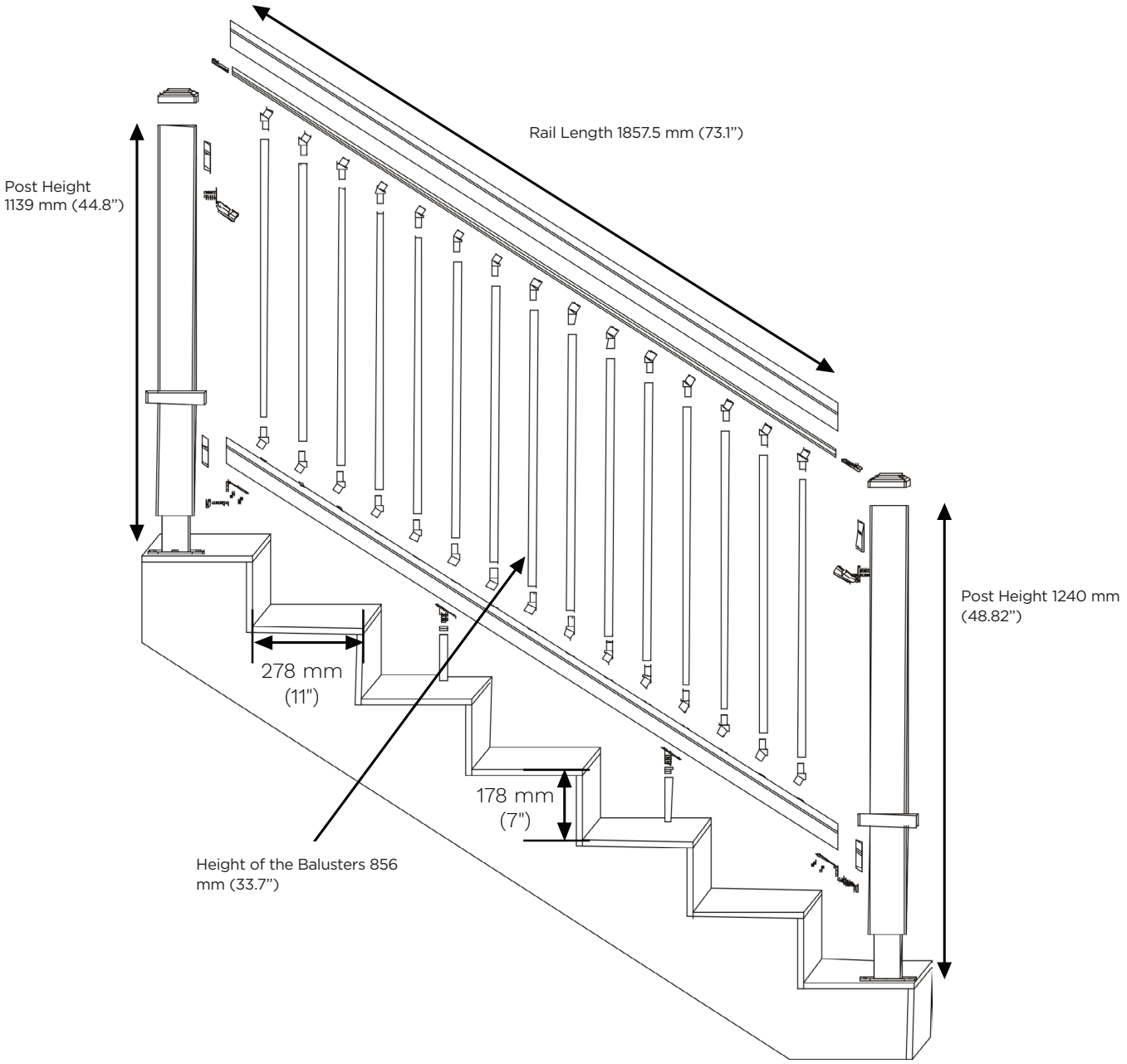

IMPORTANT POINTS:

- The stair railing is designed for a 32 degree angle with stair treads at 278 mm (11") and stair risers 178 mm (7").
- The stair railing is designed for a 1857.5 mm (73.1") rail length.
- Aluminum balusters for the stair rail need to be cut to the height of 856 mm (33.7")

1. Mark where the post mount (J-LV-0215-42) will be installed. The maximum distance of the post mount is 1645 mm (64.8") as shown in diagram 1.

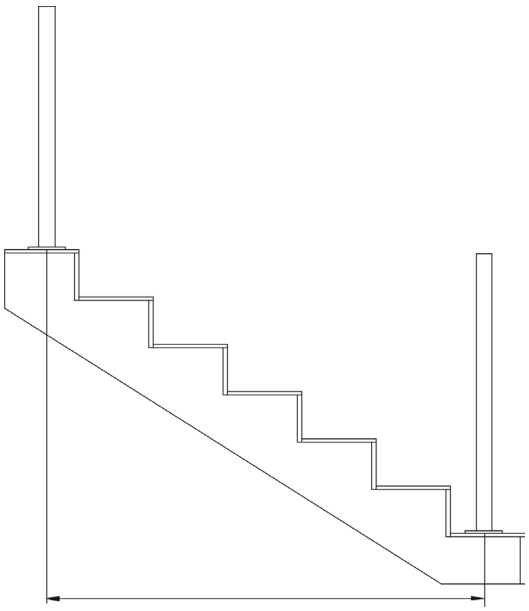

DIAGRAM 1

2. Cut post mount (J-LV-0215-42), which will be placed on the top, to the length of 1090 mm (43") as shown in diagram 2. The post mount on the lower side **DO NOT NEED TO BE CUT.**

   Cut the post sleeve (N-UH35), which will be placed on the top, to the length of 1139 mm (44.8") as shown in diagram 3. The post sleeve on the lower side **DO NOT NEED TO BE CUT.**

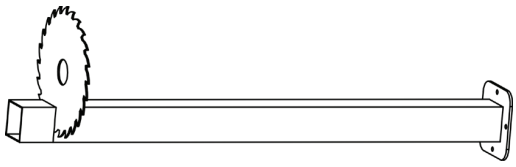

DIAGRAM 2

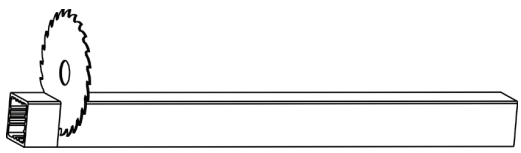

DIAGRAM 3

3. Install the post mount (J-LV-0215-42) as diagram 4.

   Install the post sleeve (N-UH35) with screw WJ0133 as show in diagram 5.

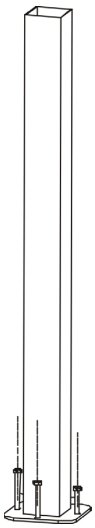

DIAGRAM 4

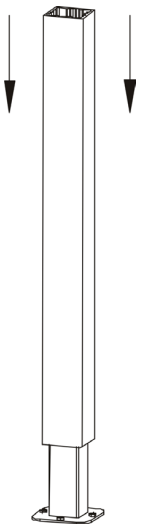

DIAGRAM 5

4. First, mark on the post which will be on the stair top using the "Stairs - Top Post" cardboard template. Use the top 4 holes for top post brackets and use the bottom 2 holes for the bottom post brackets.

   Then, pull a string down at a 32 degree angle for locating the "Stairs - Bottom Post" cardboard template on the stair bottom post as shown in diagram 6.

NOTE: THE CARDBOARD TEMPLATE LOCATION SHOULD BE MEASURED FROM THE BOTTOM.

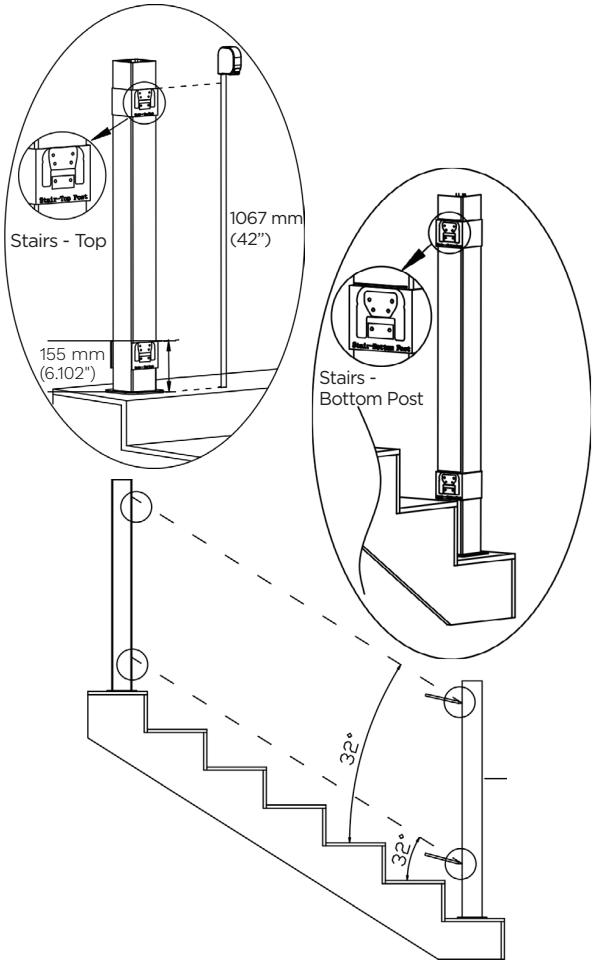

DIAGRAM 6

5 Pre-drill post bracket holes with a 3 mm (7/64 inch) bit as shown in diagram 7.

Lower the post skirt (K-LV-0119) over the post sleeve (N-UH35) as shown in diagram 8.

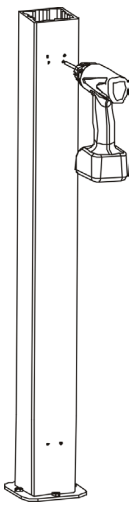

DIAGRAM 7

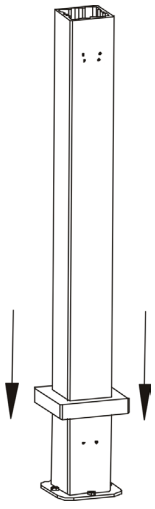

DIAGRAM 8

6 Drill in the top post brackets (D-R0203) with screw WJ0130 as shown in diagram 9.

Drill in the bottom post brackets (G-R0205) with screw WJ0131 as shown in diagram 10.

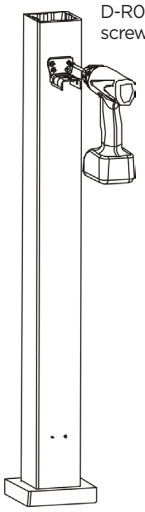

DIAGRAM 9

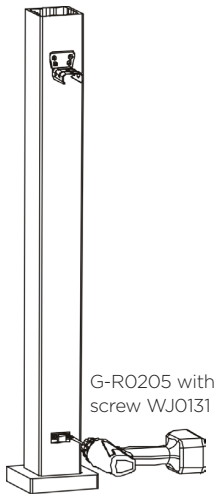

DIAGRAM 10

7 Cut rails (A-UR02) to the length (L1 in diagram 11) between the post sleeve (N-UH35) minus 3 mm (0.118") on each side for inserting gaskets (F-R0102) at a 32 degree angle. L1 can be measured like L minus 3 mm (0.118") on each side.

Remember to take out galvanized insert (B-LV-0209) before cutting rail (A-UR02). The galvanized insert (B-LV-0209) should be cut 6 mm shorter than the rail (A-UR02).

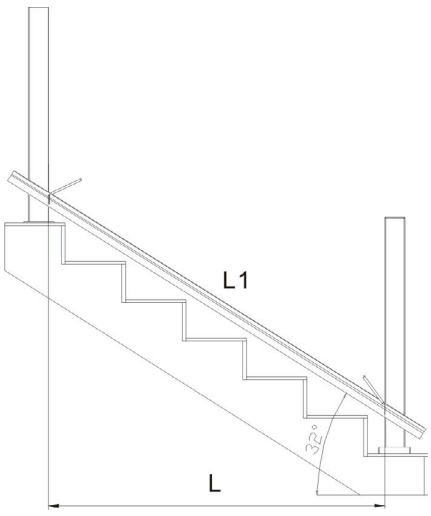

DIAGRAM 11

Note: Need to leave at least 83 mm (3.3”) between the ends of the rail and the first hole of each end as shown in diagram 12.

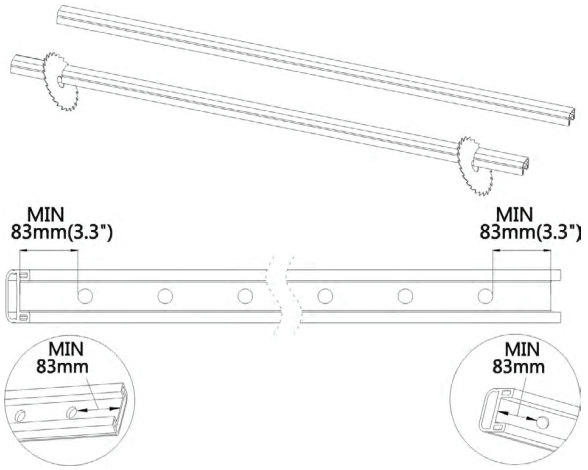

DIAGRAM 12

The galvanised insert (B-LV-0209) is designed for a maximum of 1825.7 mm as shown in diagram 13.

The railing is designed for a maximum of 1857.5 mm (73.1”) as shown in diagram 14.

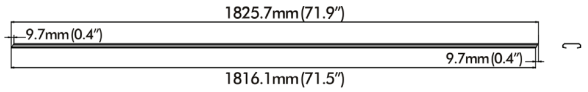

DIAGRAM 13

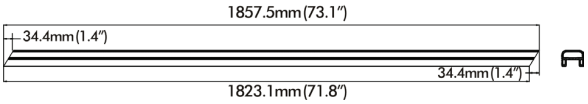

DIAGRAM 14

8 The bottom bracket (H-R0204) should be installed with screw WJ0020 at 32.5 mm (1.28”) and 24 mm (1”) from the end of the rail which will be placed on the higher side of the stairs as shown in diagram 15. The bottom bracket (H-R0204) should be installed with screw WJ0020 at 28 mm (1.1”) and 24 mm (1”) from the end of the rail which will be placed on the lower side of the stairs. Alternatively, a flat board can be used to press the bracket up against the end of rail to line up the correct distance.

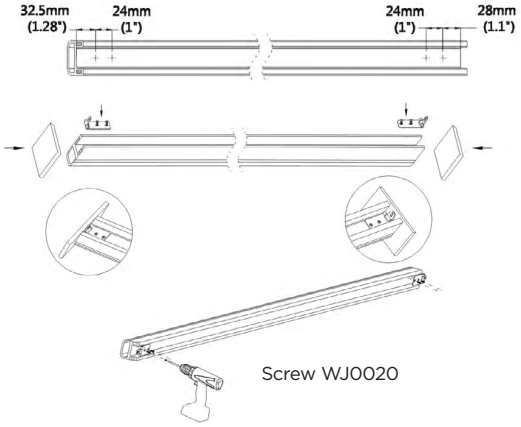

DIAGRAM 15

9 Pre-drill and install the foot blocks (I-LV-0217) with screw WJ0020 on the bottom rail as shown in diagram 16. Foot blocks should be evenly spaced out depending on the length of the final rail and cannot be installed underneath a pre-drilled baluster hole.

Note: Top rail is A in diagram 17. The holes should be facing downwards. Bottom rail is B in diagram 17. The holes should be facing upwards.

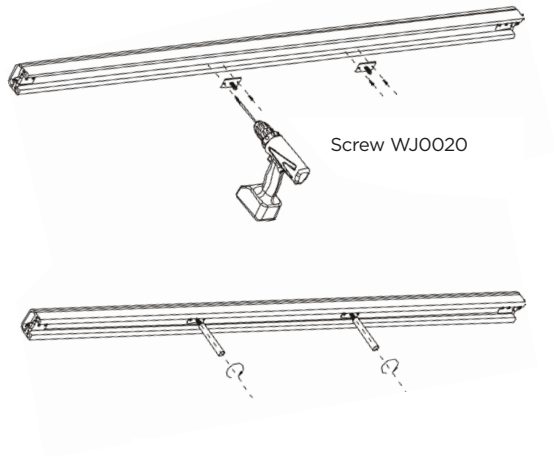

DIAGRAM 16

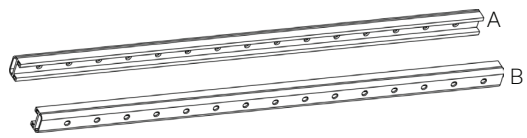

DIAGRAM 17

10 Attach the galvanized adaptors (C-LV-0210) on both ends of the galvanized insert (B-LV-0209) as shown in diagram 18.

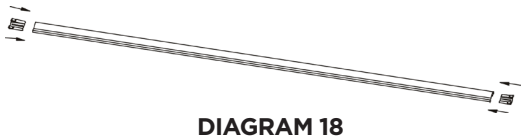

DIAGRAM 18

11 Slide the galvanize insert (B-LV-0209) into the top rail (A-UR02) as shown in diagram 19.

DIAGRAM 19

12 Cut aluminum balusters (M-LV-R0218-42) to the length of 856 mm (33.7") as shown in diagram 20.

DIAGRAM 20

13 Attach the bottom rail (A-UR02) onto the bottom post brackets (G-R0205) as shown in diagram 21.

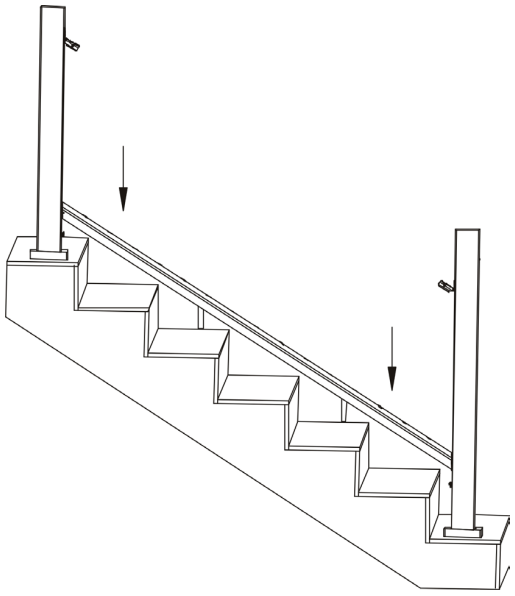

DIAGRAM 21

14 Install the baluster plugs (E-LV-0218-C) and aluminum balusters (M-LV-0218-A-42) as shown in diagram 22.

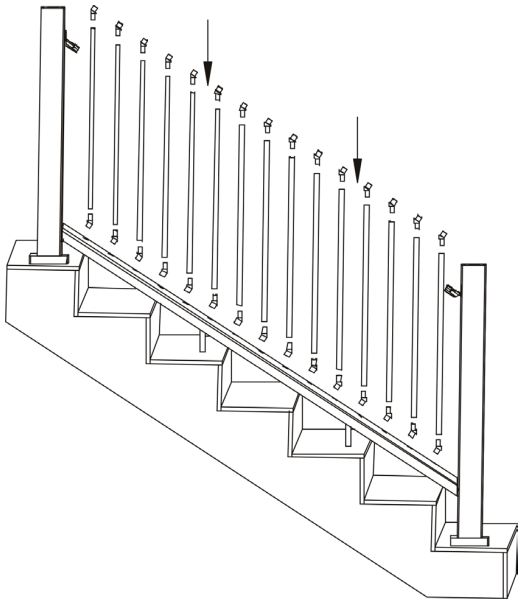

DIAGRAM 22

15 Attach the top rail (A-UR02) to the top brackets (D-R0203) as shown in diagram 23.

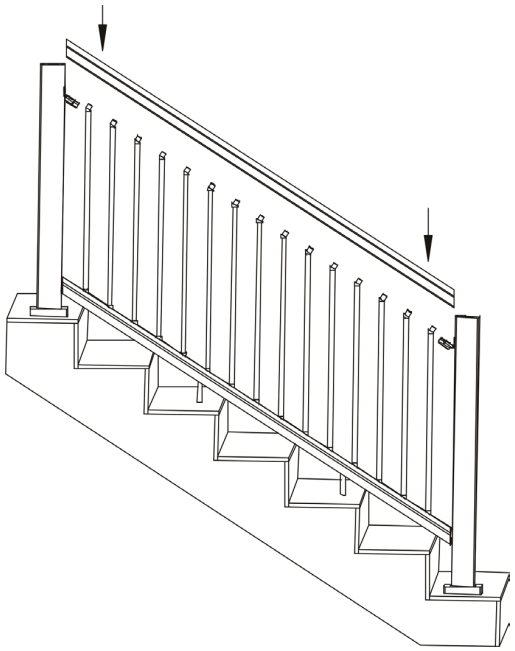

DIAGRAM 23

16 Pre-drill and install with screw WJ0143 as shown in diagram 24.

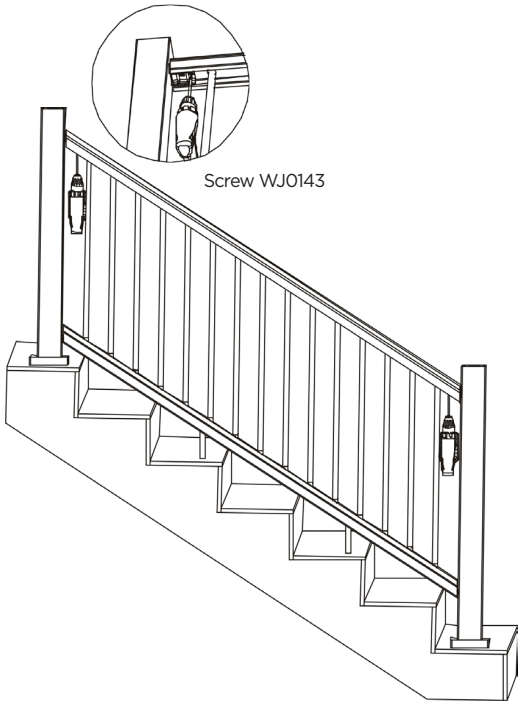

DIAGRAM 24

17 Install the post cap (L-LV-0120) and gaskets (F-R0113, O-R0115) as shown in diagram 25.

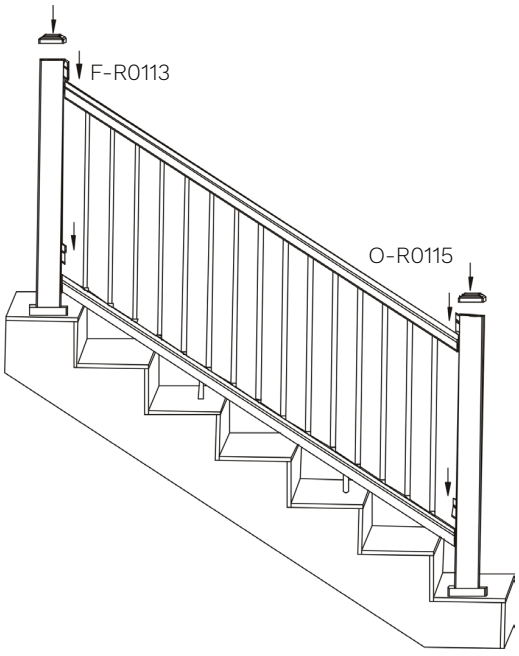

DIAGRAM 25

18 If needed adjust the foot blocks (I-LV-0217) to the correct height as shown in diagram 26.

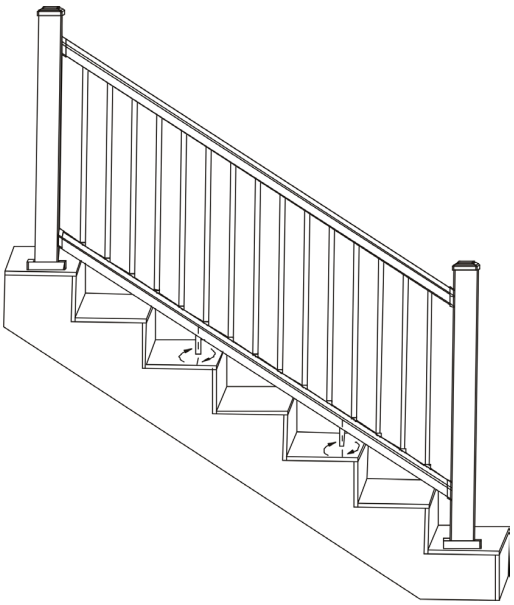

DIAGRAM 26

ELEGANCE PREMIUM®

LEADVISION INTERNATIONAL

To obtain a copy of the most current version of this installation guide,
visit us online at www.leadvisioninternational.com